Catalog #: _____ Project: _____

Prepared By: _____ Date: _____ Type: _____

LED Area Light-3

Outdoor Area Light

IP65

OVERVIEW	
Lumen Output Range	14,000 - 45,000
Wattage Range	100W - 300W
Efficacy Range (LPW)	135 - 150
Weight lbs (kg)	13.9(6.3)-20.7(9.4)

QUICK LINKS

Ordering Guide | Performance | Photometrics | Dimensions

FEATURES & SPECIFICATIONS

Construction

- Rugged die-cast aluminum housing for maximum durability and reliability.
- IP65 rated luminaire protects integral components from harsh environments.
- Shipping weight: 13.9 lbs to 20.7 lbs in carton.

Optical System

- Premium engineered IP65 rated acrylic optic assemblies deliver Type 2, 3, 4 or 5 distributions.
- Zero uplight with pole mount arm.
- Available in 5700K, 5000K, 4000K and 3000K color temperatures per
- Minimum CRI of 70.

Electrical

- High-performance driver features short circuit and over temperature protection with integral surge protection (10kV).
- 1-10V dimming (10% - 100%) standard.
- Standard Universal Voltage (120-277 VAC) Input 50/60 Hz.
- Total harmonic distortion: <10%
- Operating temperature: -40°C to +50°C (-40°F to +122°F).
- Power factor: >0.90
- Input power stays constant over life.
- Optional 10KV surge protection device meets a minimum.
- High-efficacy LEDs mounted to metal-core circuit board to maximize heat dissipation.

Controls

- Photocell and Motion Sensor
- Bypass cap.

Installation

- Mounting method ships separately and can be quickly connected to the luminaire.
- Wiring leads extended out of the main housing eliminating the need of opening the luminaire electrical chamber.
- Utilizes B2 pole drill pattern for arm mounting.
- Utilizes adjustable slip fitter for mast arm or tenon mounting.
- Optional die-cast slip fitter allows for mounting onto a 2.3/8" O.D. tenon allowing for tilting up to 90 degrees.

Warranty

- Luminaires carry a 5-year limited warranty. Complete warranty terms are located on our website.

Listings

- Listed to UL.
- Suitable for wet Locations.
- IP65 rated Luminaire per.
- 3G rated for ANSI C136.31 high vibration applications are qualified.
- DesignLights Consortium® (DLC) qualified product.

LED Area Light-3

ORDERING GUIDE

Back to Quick Links

TYPICAL ORDER EXAMPLE: **AL3 LED 100 3 SF 57K UNV DIM BRZ**

Luminaire Prefix	Light Source	Power&Lumen	Lens&Distribution	Mounting Options	Color Temp
AL3 - Area Light 3	**LED**	**100W** - 14000-15000 lms **150W** - 19800-22500 lms **240W** - 32400-36000 lms **300W** - 40500-45000 lms	**PC** - Polycarbonate Lens **3** - Type 3 **4** - Type 4 **5** - Type 5	**DM** - Square Pole Mount Arm **SF** - Adjustable Slip fitter **UM** - Flood mounting bracket **YM** - Yoke mounting bracket	**57** - 5700K CCT **50** - 5000K CCT **40** - 4000K CCT **30** - 3000K CCT

Voltage	Driver	Finish	Options	Controls (Choose One)
UNV - Universal Voltage (120-277V) **480** - High Power (277-480V)	**DIM** - 1-10V Dimming(10-100%)	**BRZ**-Bronze **WHT**-White **Option**- Custom Color	**(Blank)** - None **SPD** - 10kV Surge Protection Device **IHS** - Integral House Side Shield **3NP** - 3pins photocell **5NP** - 5pins photocell **7NP** - 7pins photocell	

Accessory Ordering Information

Mounting Accessories	
Description	**Order Number**
Adjustable Slip Fitter for Mast Arm and Tenon	SF
Square Pole Mount Arm for Mast Arm and Tenon	DM
Yoke mounting bracket	YM
Flood mounting bracket	UM

FOOTNOTES:

1 - Other power is unavailable, consult factory.
2 - Mounting and accessories are shipped together but not field installed.
3 - Fusing must be located in hand hole of pole.
4 - "BRZ" denotes finish. See Finish options.

PERFORMANCE

Back to Quick Links

DELIVERED LUMENS*

Wattage	Distribution	CRI	5700K			5000K			4000K			3000K		
			Delivered Lumens	Efficacy	BUG Rating	Delivered Lumens	Efficacy	BUG Rating	Delivered Lumens	Efficacy	BUG Rating	Delivered Lumens	Efficacy	BUG Rating
100w	Type 3	70	14305.4	143.83	B3-U0-G3	14116.5	142.1	B3-U0-G3	13927.5	140.19	B3-U0-G3	13738.6	138.45	B3-U0-G3
	Type 4		15016.4	150.39	B3-U0-G3	14831.2	148.77	B3-U0-G3	14646	146.91	B3-U0-G3	14460.7	145.29	B3-U0-G3
	Type 5		14953.9	150.26	B4-U0-G4	14774.3	148.56	B4-U0-G4	14594.7	146.75	B4-U0-G4	14415.1	145.05	B4-U0-G4
150w	Type 3	70	22458.9	150.59	B3-U0-G3	22204.2	149.11	B3-U0-G3	21949.6	147.40	B3-U0-G3	21694.9	145.92	B3-U0-G3
	Type 4		22583.5	151.04	B3-U0-G3	22304.1	149.45	B3-U0-G3	22024.6	147.58	B3-U0-G3	21745.2	145.98	B3-U0-G3
	Type 5		22572.1	151.47	B4-U0-G5	22300.1	149.76	B4-U0-G5	22028.1	147.93	B4-U0-G5	21756.1	146.22	B4-U0-G5
240w	Type 3	70	36102.6	150.47	B4-U0-G4	35709.3	149.27	B4-U0-G4	35315.9	147.63	B4-U0-G4	34922.6	146.42	B4-U0-G4
	Type 4		36956.9	153.31	B4-U0-G5	36532.5	151.62	B4-U0-G5	36108.2	149.86	B4-U0-G5	35683.8	148.17	B4-U0-G5
	Type 5		37167.1	154.31	B5-U0-G5	36719.5	152.40	B5-U0-G5	36271.9	150.54	B5-U0-G5	35824.3	148.63	B5-U0-G5
300w	Type 3	70	44509.1	148.84	B4-U0-G4	44324.0	148.03	B4-U0-G4	43953.8	146.79	B4-U0-G4	43768.7	145.98	B4-U0-G4
	Type 4		44302	147.58	B4-U0-G5	44065.4	146.95	B4-U0-G5	43592.1	145.37	B4-U0-G5	43355.4	144.74	B4-U0-G5
	Type 5		41341.7	137.12	B5-U0-G5	41099.9	136.49	B5-U0-G5	40616.2	134.88	B5-U0-G5	40374.4	134.25	B5-U0-G5

*LEDs are frequently updated therefore values are nominal.

ELECTRICAL DATA*

Wattage	120V	208V	240V	277V
100w	0.83	0.48	0.42	0.36
150w	1.25	0.72	0.63	0.54
240w	2.00	1.15	1.00	0.87
300w	2.50	1.44	1.25	1.08

*Electrical data at 25C (77F). Actual wattage may differ by +/-0.3%.

RECOMMENDED LUMEN MAINTENANCE (14L-45L)[1]

Ambient Temperature	CInitial [2]	3K hrs.[2]	5K hrs.3	7K hrs.[3]	10K hrs.[3]
1C-85C	100%	100%	99.20%	98.74%	98.13%

1 - Lumen maintenance values at 25C are calculated per TM-21 based on LM-80 data and in-situ testing.
2 - In accordance with IESNA TM-21-11, Projected Values represent interpolated value based on time durations that are within six times the IESNA LM-80-08 total test duration for the device under testing.
3 - Lumen maintenance values at 25C are calculated per TM-21 based on LM-80 data and in-situ testing times the IESNA LM-80-08 total test duration for the device under testing.

LUMINAIRE EPA CHART

100W-150W	Single	D180°	D90°	T90°	TN120°	Q90°
EPA	0.66ft²	1.32ft²	0.8ft²	1.32ft²	1.32ft²	1.32ft²
200W-300W	Single	D180°	D90°	T90°	TN120°	Q90°
EPA	0.76ft²	1.59ft²	0.97ft²	1.59ft²	1.59ft²	1.59ft²

PHOTOMETRICS

Back to Quick Links

Luminaire photometry has been conducted by an accredited laboratory in accordance with IESNA LM-79. As specified by IESNA LM-79 the entire luminaire is tested as the source resulting in a luminaire efficiency of 100%.

AL3 300W T3

LUMINAIRE DATA

Type 3 Distribution	
Description	3000 Kelvin, 70 CRI
Delivered Lumens	43,769
Watts	300
Efficacy	145.98
IES Type	Type III - Medium
BUG Rating	B4-U0-G4

Zonal Lumen Summary		
Zone	**Lumens**	**%Luminaire**
Low (0-30)°	9,322.00	21.30%
Medium (0-60)°	32,061.80	73.30%
High (60-90)°	11,703.80	26.70%
Very High (70-100)°	4,707.40	10.80%
Uplight (90-120)°	0	0%
Total Flux	43,765.60	100%

Luminous Intensity Distribution Curve

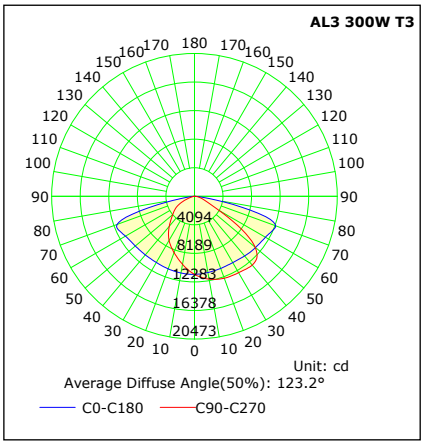

ISO FOOTCANDLE

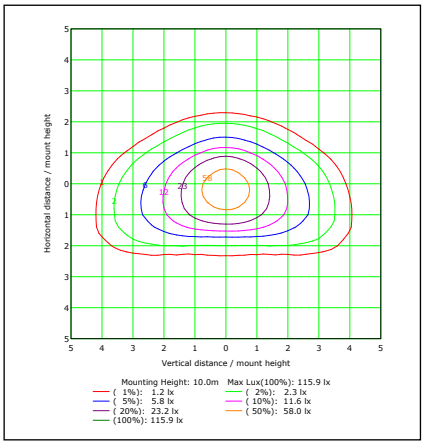

AL3 300W T4

LUMINAIRE DATA

Type 4 Distribution	
Description	3000 Kelvin, 70 CRI
Delivered Lumens	43,355
Watts	300
Efficacy	144.74
IES Type	Type IV - Medium
BUG Rating	B4-U0-G5

Zonal Lumen Summary		
Zone	**Lumens**	**%Luminaire**
Low (0-30)°	7,238.80	16.70%
Medium (0-60)°	26,791.10	61.80%
High (60-90)°	16,563.30	38.20%
Very High (70-100)°	8,229.70	19.00%
Uplight (90-120)°	0	0%
Total Flux	43,354.30	100%

Luminous Intensity Distribution Curve

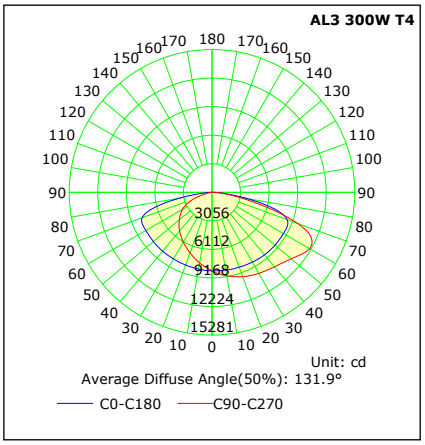

ISO FOOTCANDLE

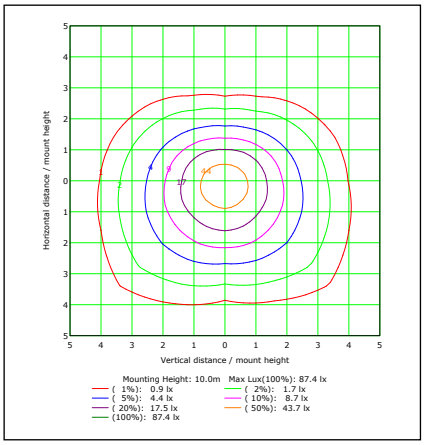

AL3 300W T5

LUMINAIRE DATA

Type 5 Distribution	
Description	3000 Kelvin, 70 CRI
Delivered Lumens	40,374
Watts	300
Efficacy	134.25
IES Type	Type V - Medium
BUG Rating	B5-U0-G5

Zonal Lumen Summary		
Zone	**Lumens**	**%Luminaire**
Low (0-30)°	5,416.80	13.40%
Medium (0-60)°	22,210.50	55.00%
High (60-90)°	18,164.30	45.00%
Very High (70-100)°	10,673.50	26.40%
Uplight (90-120)°	0	0%
Total Flux	40,374.80	100%

Luminous Intensity Distribution Curve

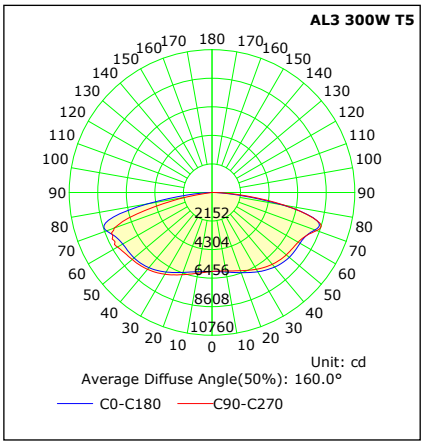

ISO FOOTCANDLE

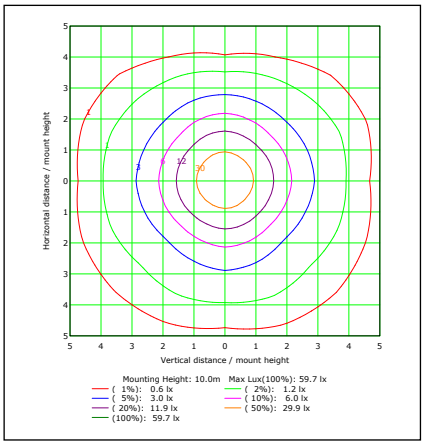

PRODUCT DIMENSIONS

Back to Quick Links

100W, 150W

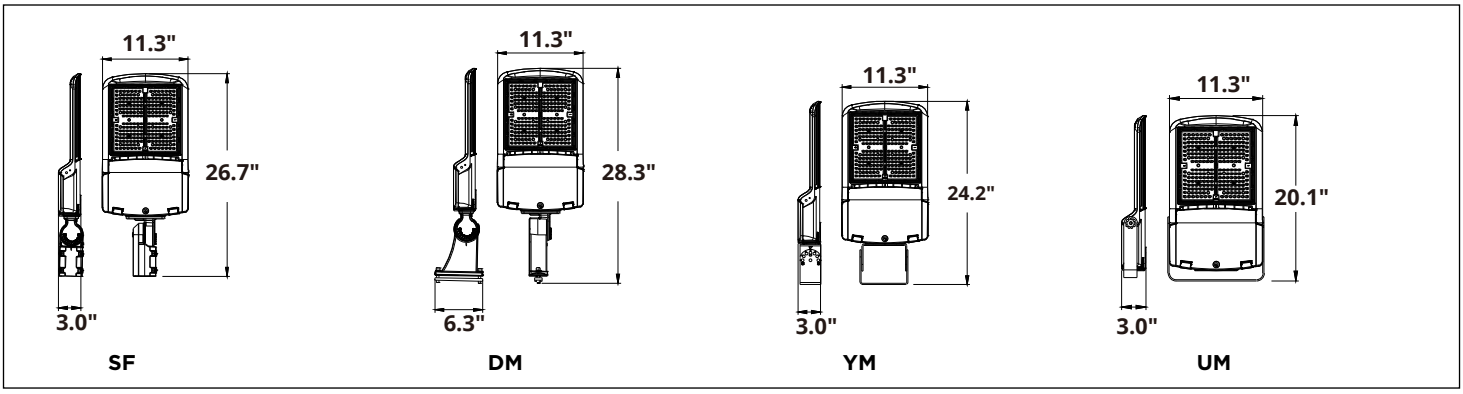

240W, 300W

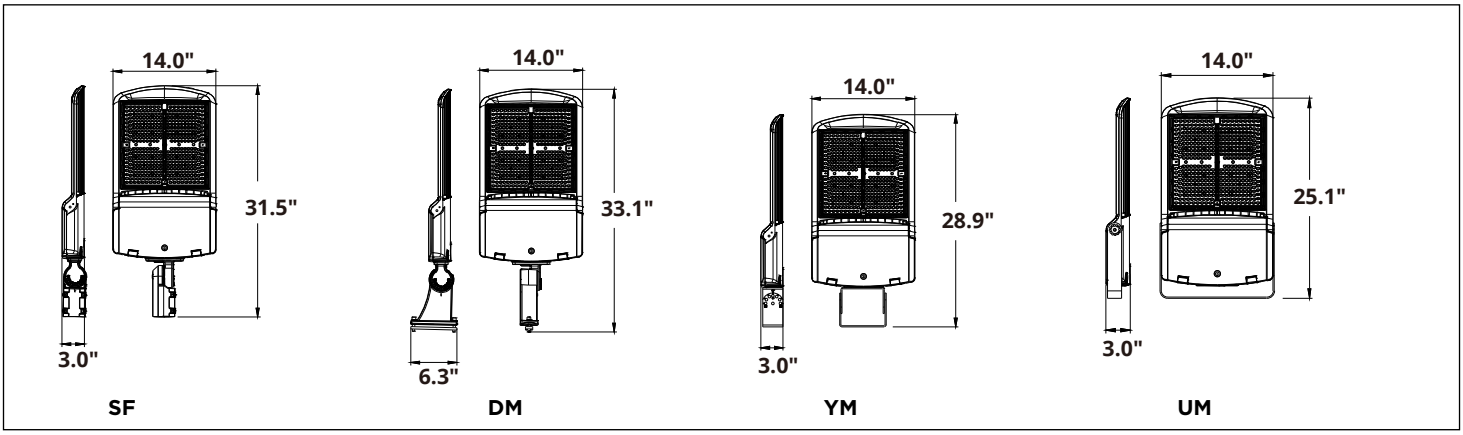

SHIELD

MOUNTING

Back to Quick Links

SF - Adjustable Slip Fitter for Mast Arm and Tenon	**DM - Square Pole Mount Arm for Mast Arm and Tenon**	**YM - Yoke mounting bracket**	**UM - Flood mounting bracket**

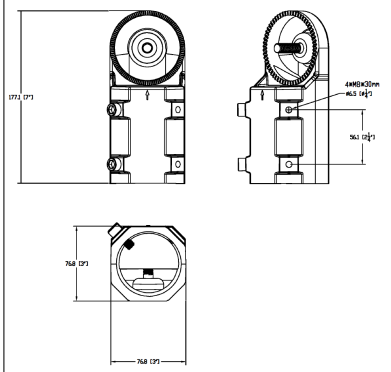

SF - Adjustable Slip Fitter for Mast Arm and Tenon

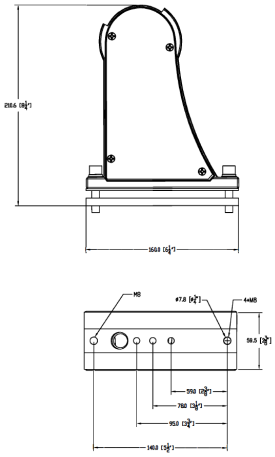

DM - Square Pole Mount Arm for Mast Arm and Tenon

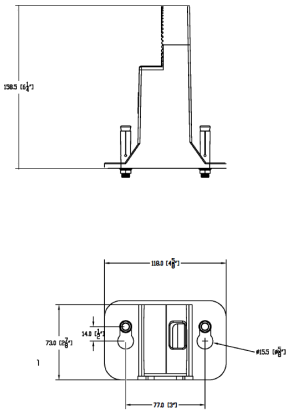

YM - Yoke mounting bracket

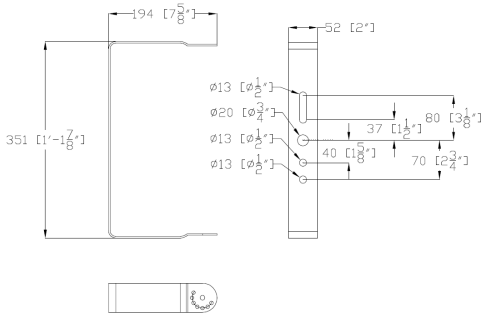

100-150W
UM - Flood mounting bracket

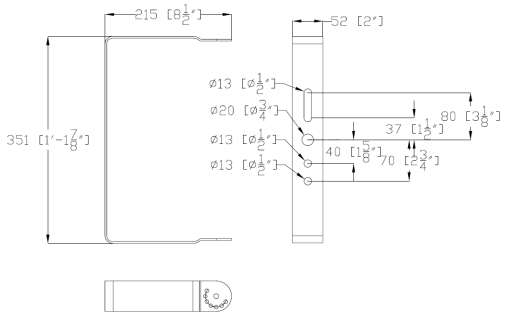

200-300W
UM - Flood mounting bracket